NEW YORK UNIVERSITY
INSTITUTE OF MATHEMATICAL SCIENCES
LIBRARY
25 Waverly Place, New York 3, N. Y.

IMM-NYU 271
JUNE 1960

NEW YORK UNIVERSITY
INSTITUTE OF
MATHEMATICAL SCIENCES

Waves on a Sphere

A. S. PETERS

PREPARED UNDER
CONTRACT NO. NONR-285(06)
WITH THE
OFFICE OF NAVAL RESEARCH
UNITED STATES NAVY

NEW YORK UNIVERSITY
INSTITUTE OF MATHEMATICAL SCIENCES
LIBRARY
25 Waverly Place, New York 3, N. Y.

IMM-271
C.1

REPRODUCTION IN WHOLE OR IN PART
IS PERMITTED FOR ANY PURPOSE
OF THE UNITED STATES GOVERNMENT

NEW YORK UNIVERSITY
INSTITUTE OF MATHEMATICAL SCIENCES
LIBRARY
25 Waverly Place, New York 3, N. Y.

NEW YORK UNIVERSITY
INSTITUTE OF MATHEMATICAL SCIENCES
LIBRARY
25 Waverly Place, New York 3, N. Y.

IMM-NYU 271
June 1960

New York University

Institute of Mathematical Sciences

WAVES ON A SPHERE

A. S. Peters

This report represents results obtained at the Institute of Mathematical Sciences, New York University, under the sponsorship of the Office of Naval Research, Contract No. Nonr-285(06).

1. Introduction.

This note is concerned with an axisymmetric disturbance which travels over the surface of a sphere and obeys the equation

$$(1) \qquad \frac{1}{\sin\theta}\frac{\partial}{\partial\theta}\sin\theta\frac{\partial\psi}{\partial\theta} = \frac{1}{c^2}\frac{\partial^2\psi}{\partial t^2}$$

or, if $\cos\theta = x$, the equation

$$(2) \qquad \frac{\partial}{\partial x}(1-x^2)\frac{\partial\psi}{\partial x} = \frac{1}{c^2}\frac{\partial^2\psi}{\partial t^2} \quad .$$

The disturbance is supposed to be generated in the neighborhood of a point P on a sphere; and the object is to trace the disturbance as it moves between P and the antipodal point.

The equation (1) may be regarded as a specialization of the wave equation

$$(3) \qquad \frac{1}{\rho^2\sin\theta}\frac{\partial}{\partial\theta}\sin\theta\frac{\partial\psi}{\partial\theta} + \frac{1}{\rho^2}\frac{\partial}{\partial\rho}\rho^2\frac{\partial\psi}{\partial\rho} + \frac{1}{\rho^2\sin^2\theta}\frac{\partial^2\psi}{\partial\phi^2} = \frac{1}{c^2}\frac{\partial^2\psi}{\partial t^2}$$

where, in spherical coordinates, θ is the co-latitude, ϕ is the longitude, and ρ is the radial distance, while t is the time. There are numerous problems in mathematical physics for which a solution of (3) which is independent of ρ and ϕ has interest. The equation (2) arises in connection with the analysis of sound waves in a narrow region bounded by two concentric spheres, elastic waves in a spherical tightly-stretched membrane, water waves on the surface of a shallow spherical ocean and many

other problems concerned with wave motions on vibrations. Consequently, the equation, subject to appropriate initial and boundary conditions, certainly has been solved more times than we are aware of. However, we have not seen an analysis of the problem under consideration; and in all other analyses of (2) that we have seen the solution is presented in the form of an infinite series of eigenfunctions. This kind of representation is of course quite satisfactory for some purposes but it throws little light on the intrinsic nature of the solution when we wish to consider it as representing a progressive disturbance. The purpose of what follows is to show that a certain disturbance which satisfies (1) can be described in such a way that the description is similar to the D'Alembert description of the progress of a disturbance in a stretched string.

The passage of a wave over the entire surface of the earth is certainly not an impossible phenomenon. It is probable that in prehistoric times there were some terrific submarine volcanic explosions which created water waves of such force that they traveled enormous distances; and it is even possible that some of these waves were propagated back to the point of disturbance after collision at the antipodal point. This is just the behavior which certain atmospheric waves exhibited during the eruption of Krakatoa, the most gigantic volcanic action known to man.

Krakatoa is the anglicized name of a volcano in the Sundra Strait. Situated between Java and Sumatra; and lying at the intersection of submarine volcanic fissures, Krakatoa showed

signs of uneasy activity in the spring and summer of 1883. It exploded on Aug. 26, 1883; and violent paroxysms, reaching a peak on the 27th, continued for two days. Neighboring islands were either devastated or annihilated. Approximately 200,000,000,000 cubic feet of material were extruded; and it has been estimated that the energy of the excited atmospheric wave alone was some one thousand times that of the energy released by the atomic bomb explosion at Nagasaki. The subsequent effects of the eruption were startling; some were frightful, some were wonderful; all were almost incredibly awesome, and many were world wide. [1]*

Of all the numerous spectacular phenomena excited by the eruption, the global behavior of the atmospheric pressure wave of August 27, 1883 is the one of most interest in the present context. This wave was created by the most intense sudden explosion of the eruption. At some stations at least seven passages of the pressure wave were recorded, four as the wave came from Krakatoa; and three as the wave came from the antipodal reflection point located in Venezuela. For each of the first two passages, recording barometers at many stations showed that as the wave arrived and passed over, the pressure was suddenly increased from p to a wavy summit then sharply decreased

---

*See [1]:- Eruption of Krakatoa and Subsequent Phenomena. Report of the Krakatoa Committee of the Royal Society of London. (1888).

The author wishes to thank Prof. Stoker for calling his attention to Krakatoa, and for the helpful conversations which led to the following analysis.

to a lower level of values oscillating about p-k ($k > 0$); and that the pressure variation was detected for nearly two hours. In subsequent passages the wave became deformed and the pressure variation lost the character described above although the returning wave still caused rises in pressure.

The following diagrams, taken from [1], show the progress of the wave during the first four envelopments of the earth. The circles on the right represent the hemisphere of the earth which has Krakatoa as its pole; those on the left represent the opposite hemisphere with the Antipodes as pole. The vertical line through k is the meridian which passes through the North pole. The asterisk in the first left hand circle shows the position of Cape Horn at the southernmost tip of South America. The contour lines show the progress of a phase of the pressure wave at each successive even hour of Greenwich mean time beginning at 4 hrs. 27 Aug. 1883. It will be noticed that the lines representing the successive positions depart more and more from circular form as the elapsed time from the initiation of the disturbance increases. This indicates that the velocity of various points of the wave front was not constant.

Wave No. 1
First Passage
From Krakatoa to Antipodes

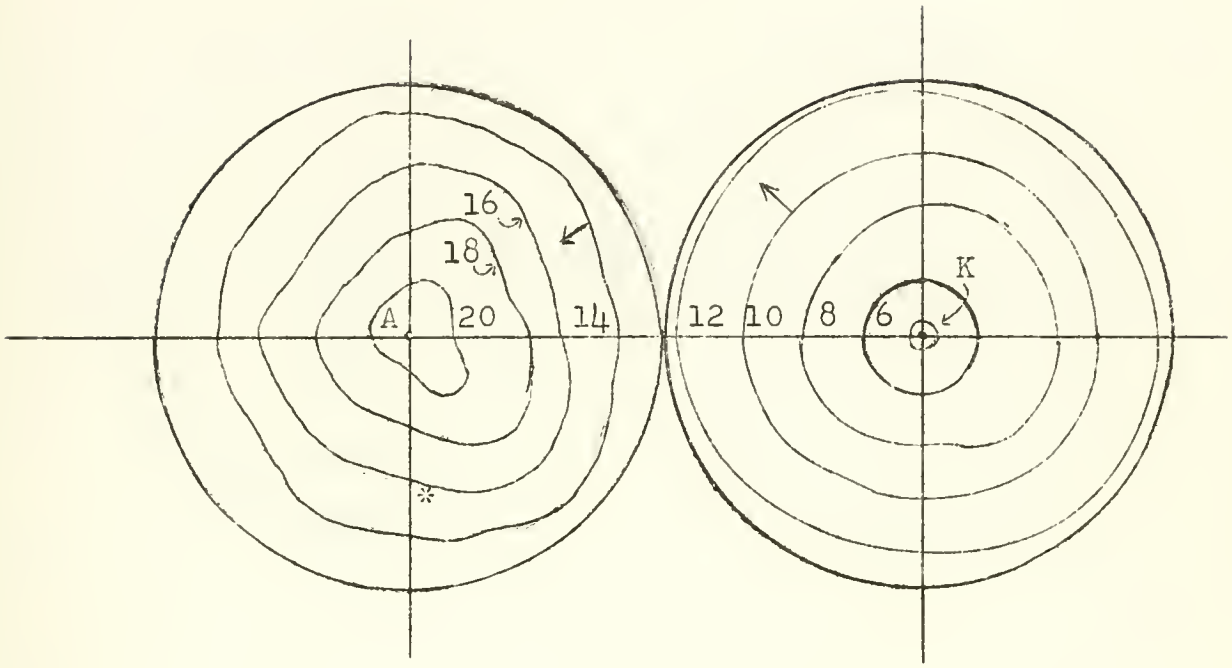

Wave No. 2
First Passage
From Antipodes Back to Krakatoa

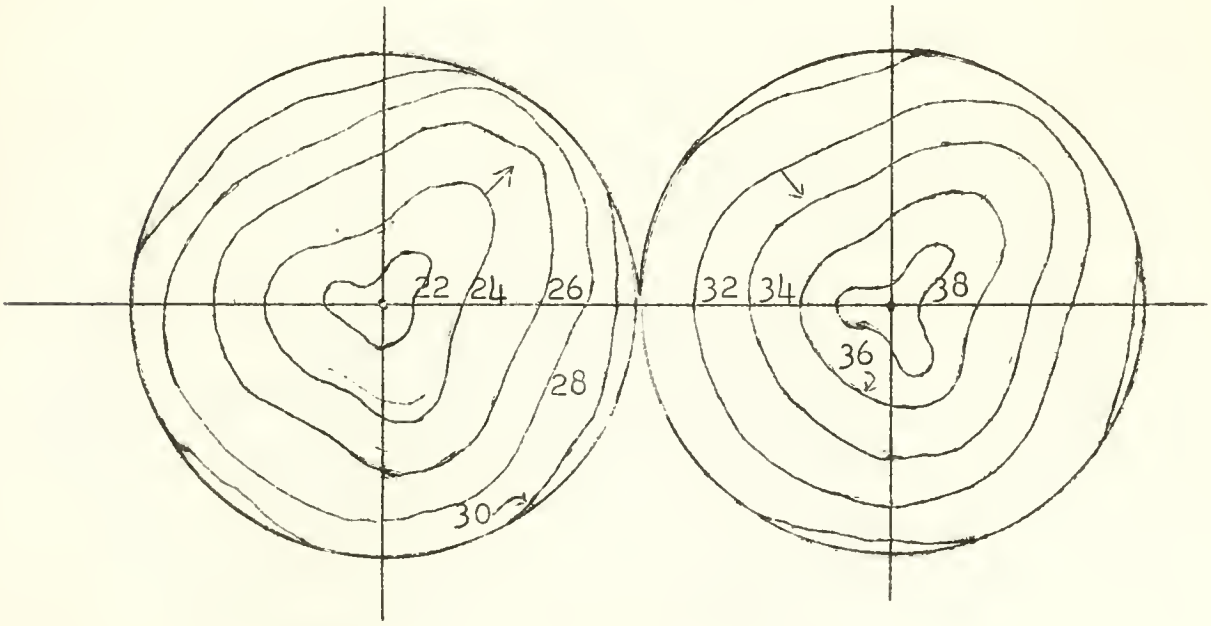

Wave No. 3

Second Passage

Krakatoa to Antipodes

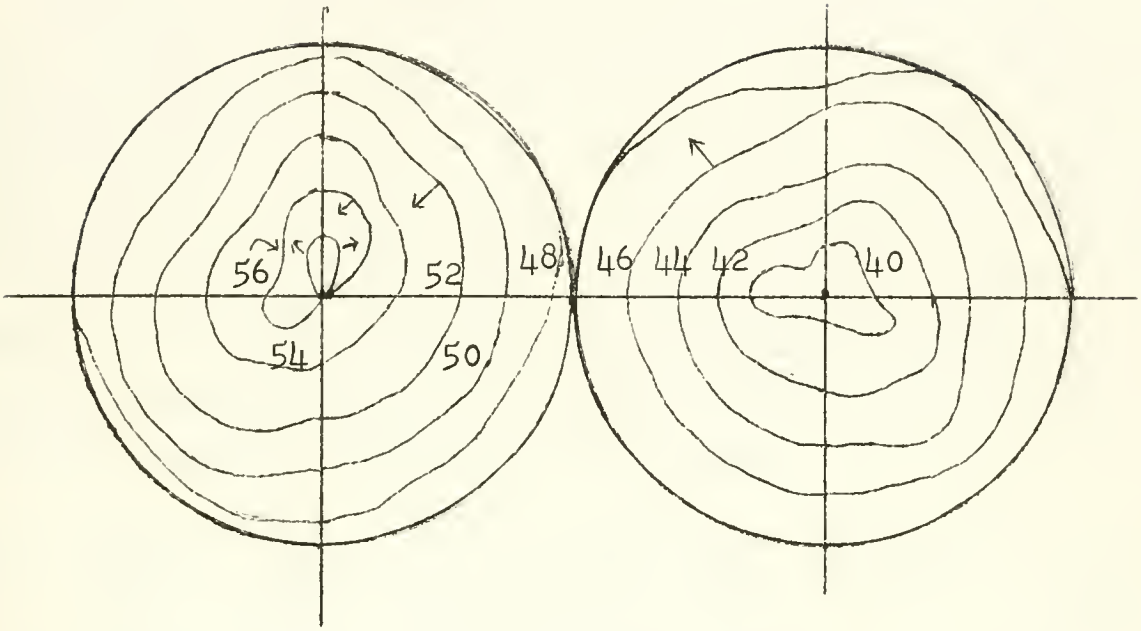

Wave No. 4

Second Passage

Antipodes Back to Krakatoa

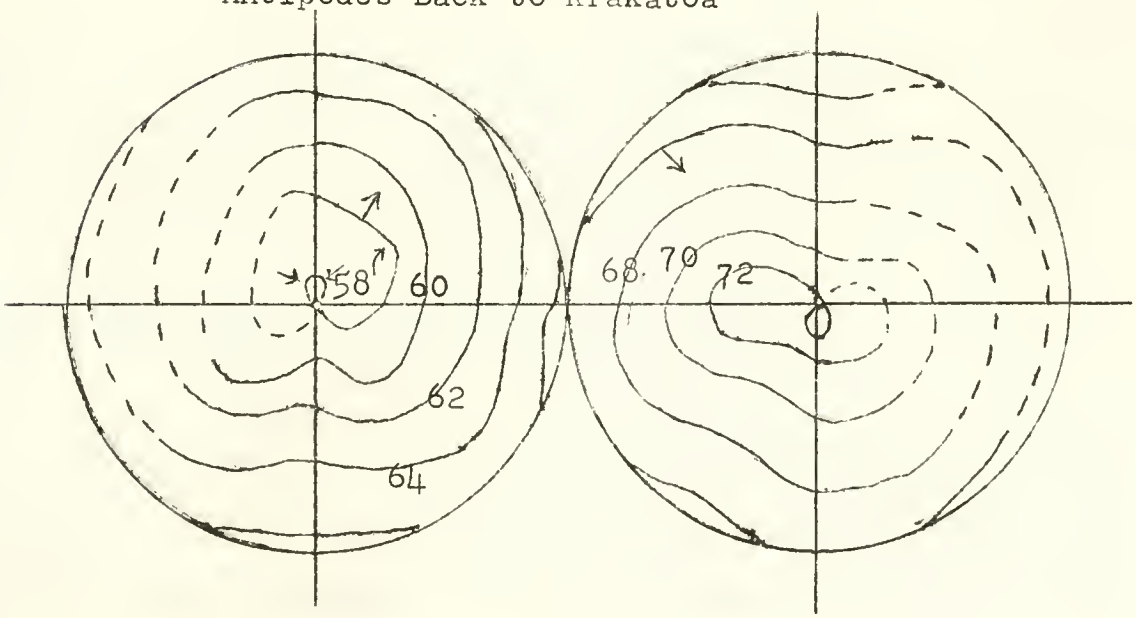

2. An Interpretation

In order to have a concrete interpretation of (1) before us, let us consider the case of axisymmetric waves on the surface of a shallow spherical ocean of an incompressible, inviscid, gravitating fluid of constant density. Let the components of velocity of a particle be u_1, the velocity along a meridian from north to south; u_2, the radial velocity; and u_3 the velocity along a circle of latitude from east to west. Then the momentum equations in spherical coordinates (ρ,θ,ϕ) are

$$\frac{\partial u_1}{\partial t} + \frac{u_1}{\rho}\frac{\partial u_1}{\partial \theta} + u_2\frac{\partial u_1}{\partial \rho} + \frac{u_3}{\rho \sin\theta}\frac{\partial u_1}{\partial \phi} + \frac{u_1 u_2}{\rho} - \frac{u_3^2 \cot\theta}{\rho} = -\frac{1}{\delta\rho}\frac{\partial p}{\partial \theta}$$

$$\frac{\partial u_2}{\partial t} + \frac{u_1}{\rho}\frac{\partial u_2}{\partial \theta} + u_2\frac{\partial u_2}{\partial \rho} + \frac{u_3}{\rho \sin\theta}\frac{\partial u_2}{\partial \phi} - \frac{u_3^2}{\rho} - \frac{u_1^2}{\rho} = -g - \frac{1}{\delta}\frac{\partial p}{\partial \rho}$$

$$\frac{\partial u_3}{\partial t} + \frac{u_1}{\rho}\frac{\partial u_3}{\partial \theta} + u_2\frac{\partial u_3}{\partial \rho} + \frac{u_3}{\rho \sin\theta} + \frac{\partial u_3}{\partial \phi} + \frac{u_3 u_2}{\rho} + \frac{u_3 u_1 \cot\theta}{\rho}$$

$$= -\frac{1}{\delta\rho \sin\theta}\frac{\partial p}{\partial \phi}$$

where p is the pressure, δ is the constant density and g is a constant gravitational acceleration due to a body force directed toward the center of the sphere. The continuity equation is

$$\frac{1}{\rho}\frac{\partial u_1}{\partial \theta} + \frac{2u_2}{\rho} + \frac{\partial u_2}{\partial \rho} + \frac{u_1 \cot\theta}{\rho} + \frac{1}{\rho \sin\theta}\frac{\partial u_3}{\partial \phi} = 0.$$

Let us assume that the motion does not depend on the longitude, and that the linear shallow water theory is applicable. This theory is here characterized by the assumptions that the radial

acceleration can be neglected and that the non linear terms in the equations can be neglected. Under these assumptions the third of the momentum equations is automatically satisfied and the first two reduce to

$$\frac{\partial u_1}{\partial t} = -\frac{1}{\delta\rho}\frac{\partial p}{\partial \theta} \tag{4}$$

$$0 = -g - \frac{1}{\delta}\frac{\partial p}{\partial \rho} \tag{5}$$

and the continuity equation reduces to

$$\frac{1}{\sin\theta}\frac{\partial u_1 \sin\theta}{\partial\theta} + \frac{1}{\rho}\frac{\partial \rho^2 u_2}{\partial \rho} = 0. \tag{6}$$

In addition, we suppose that $u_2 = 0$ at $\rho = a$, the bottom of the ocean,: and that $p = 0$ at the free surface whose equation is

$$\rho - a - h - \psi(\theta,t) = 0$$

where h is the depth of the ocean and $\psi(\theta,t)$ is the elevation of the free surface above the equilibrium position. The linearized kinematic condition at the free surface is then

$$u_2 = \psi_t(\theta,t). \tag{7}$$

From (5) we find

$$p = g\delta(a+h+\psi-\rho), \tag{8}$$

from which

(9) $$\frac{\partial p}{\partial \theta} = g\delta \frac{\partial \psi}{\partial \theta}$$

and hence from (4)

(10) $$\frac{\partial u_1}{\partial t} = - \frac{g}{\rho} \frac{\partial \psi}{\partial \theta} .$$

Differentiation of (6) with respect to the time gives

$$\frac{1}{\sin \theta} \frac{\partial}{\partial \theta} \sin \theta \frac{\partial u_1}{\partial t} + \frac{1}{\rho} \frac{\partial}{\partial \rho} \rho^2 \frac{\partial u_2}{\partial t} = 0$$

which by using (10) becomes

$$- \frac{g}{\sin \theta} \frac{\partial}{\partial \theta} \sin \theta \, \psi_\theta + \frac{\partial(\rho^2 u_{2t}}{\partial \rho} = 0.$$

If we integrate this with respect to ρ from $\rho = a$ to the free surface we find

$$- \frac{g(h+\psi)}{\sin \theta} \frac{\partial}{\partial \theta} \sin \theta \, \psi_\theta + (a+h+\psi)^2 u_{2t}(a+h+\psi,\theta,t) = 0.$$

Then if we use (7) and retain only first order terms we see that ψ must satisfy

(11) $$- \frac{gh}{\sin \theta} \frac{\partial}{\partial \theta} \sin \theta \frac{\partial \psi(\theta,t)}{\partial \theta} + a^2 \frac{\partial^2 \psi(\theta,t)}{\partial t^2} = 0.$$

The energy equation associated with

$$\frac{c^2}{\sin \theta} \frac{\partial}{\partial \theta} \sin \theta \frac{\partial \psi}{\partial \theta} - \frac{\partial^2 \psi}{\partial t^2} = 0$$

can be found by multiplying it by $\psi_t \sin\theta$ and integrating with respect to θ and t:-

$$c^2 \int_0^\pi \int_0^t \psi_t \frac{\partial}{\partial\theta} \sin\theta \frac{\partial\psi}{\partial\theta}\, dt d\theta - \int_0^\pi \int_0^t \psi_t \psi_{tt}\, dt d\theta = 0$$

Integration gives

$$c^2 \int_0^\pi \psi_\theta^2(\theta,t) \sin\theta\, d\theta + \int_0^\pi \psi_t^2(\theta,t) \sin\theta\, d\theta$$

$$= c^2 \int_0^\pi \psi_\theta^2(\theta,0) \sin\theta\, d\theta + \int_0^\pi \psi_t^2(\theta,0) \sin\theta\, d\theta.$$

The interpretation of this energy equation depends of course on the meaning of ψ and c. It is most easily interpreted if ψ denotes the radial displacement of a thin elastic spherical membrane. For this case c^2 is proportional to the uniform tension and the equation simply states that the kinetic energy plus the potential energy of the membrane is constant.

3. Bernoulli-type Solution.

We proceed now to solve

$$(12) \qquad \frac{1}{\sin\theta}\frac{\partial}{\partial\theta}\sin\theta\frac{\partial\psi}{\partial\theta} = \frac{1}{c^2}\psi_{tt}$$

$$-\pi < \theta < \pi \quad ; \quad 0 < t < \infty \quad ; \quad c = \frac{\sqrt{gh}}{a}$$

subject to the following initial conditions. We assume that ψ is initially in the equilibrium position, that is

$$(13) \qquad \psi(\theta,0) = 0.$$

We also assume that the initial velocity in an axially symmetric neighborhood of a point P, which we may tako to be the north pole, $\theta = 0$, is given by

$$(14) \qquad \psi_t(\theta,0) = \begin{cases} f(\theta) & 0 \leq \theta < \theta_1 < \pi \\ 0 & \theta_1 < \theta < \pi. \end{cases}$$

where, in the neighborhood $-\theta_1 < \theta < \theta_1$, $f(\theta) = f(-\theta)$. In addition, we require the solution to be bounded at the poles when $f(\theta)$ is bounded at $\theta = 0$ and $\theta = \pi$.

If we introduce the independent variable

$$x = \cos\theta$$

the equation becomes

$$(15) \qquad \frac{\partial}{\partial x}(1-x^2)\frac{\partial\chi}{\partial x} = \frac{1}{c^2}\chi_{tt} \qquad -1 < x < 1$$

where

$$\chi(x,t) = \psi(\text{arc cos } x,t)$$

with the initial conditions

$$\text{(16)} \qquad \begin{aligned} \chi(x,0) &= 0 \\ \chi_t(x,0) &= f(\text{arc cos } x) = F(x). \end{aligned}$$

The Bernoulli-type representation of the solution of (15), (16) as an eigenfunction expansion can easily be found by using the Legendre transform

$$\chi^*(n,t) = \int_{-1}^{1} P_n(x)\chi(x,t)dx$$

where n is an integer and

$$P_n(x) = \frac{1}{2^n}\frac{1}{n!}\frac{d^n}{dx^n}(x^2-1)^n$$

is the polynomial solution of

$$\frac{d}{dx}(1-x^2)\frac{d}{dx}P_n(x) + n(n+1)P_n = 0.$$

It is well known that these polynomials are orthogonal:-

$$\int_{-1}^{1} P_n(x)P_m(x)dx = 0 \qquad n \neq m$$

$$\int_{-1}^{1} P_n^2(x)dx = \frac{2}{2n+1}$$

and that for a piecewise smooth arbitrary function $\chi_1(x)$ prescribed in $-1 < x < 1$

$$\chi_1(x) = \frac{1}{2}[\chi_1(x+0)+\chi_1(x-0)] = \frac{1}{2}\sum_{n=0}^{\infty}(2n+1)\chi_1^*(n)P_n(x) .$$

The application of the Legendre transform reduces (15) and (16) to

(17) $$\chi^*_{tt} + c^2 n(n+1)\chi^* = 0$$

(18) $$\chi^*(n,0) = 0$$

$$\chi^*_t(n,0) = \int_{-1}^{1} F(x)P_n(x)dx = a_n.$$

The solution of (17), (18) for $n \neq 0$ is

$$\chi^*(n,t) = \frac{a_n \sin ct\sqrt{n(n+1)}}{c\sqrt{n(n+1)}}$$

and for $n = 0$

$$\chi^*(0,t) = a_0 t.$$

After inversion we have

$$\chi(x,t) = \frac{t}{2}P_0(x)\int_{-1}^{1} F(x)P_0(x)dx$$

$$+ \frac{1}{2c}\sum_{n=1}^{\infty}\frac{(2n+1)P_n(x)\int_{-1}^{1} F(x)P_n(x)dx\cdot\sin ct\sqrt{n(n+1)}}{\sqrt{n(n+1)}} .$$

In terms of the original variables this is

$$(19) \qquad (\theta,t) = \frac{t}{2} P_0(\cos\theta) \int_0^{\theta_1} f(\theta)P_0(\cos\theta)\sin\theta d\theta$$

$$+ \frac{1}{2c}\sum_{n=1}^{\infty} \frac{(2n+1)P_n(\cos\theta)\int_{\theta}^{\theta_1} f(\theta)P_n(\cos\theta)\sin\theta d\theta \cdot \sin ct\sqrt{n(n+1)}}{\sqrt{n(n+1)}}.$$

The representation (19), although useful for some purposes, does not present a direct picutre of the waves as they travel from the north to the south pole. For example, the wave front requires some time to get to the south pole, and hence $\psi(\pi,t)$ must be zero for sufficiently small t but it is not easy to see that

$$\frac{t_1}{2} P_0(-1) \int_{\theta}^{\theta_1} f(\theta)P_0(\cos\theta)\sin\theta d\theta$$

$$+ \frac{1}{2c}\sum_{n=1}^{\infty} \frac{(2n+1)P_n(-1)\int_{\theta}^{\theta_1} f(\theta)P_n(\cos\theta)\sin\theta d\theta \cdot \sin ct_1\sqrt{n(n+1)}}{\sqrt{n(n+1)}}$$

is equal to zero if $t_1 > 0$ is small. This remark of course merely underlines the well known disadvantage of expressing solutions of wave motion problems as an infinite series of functions involving the time. We can expect a clearer picture of the wave motion if we can express $\psi(\theta,t)$ as the sum of a finite number of terms. The series (19) can be summed by applying the Laplace transform with respect to t, and subsequently using various identities and expansions involving the Legendre functions. Instead of doing this we prefer to apply the Laplace directly to (15) and (16).

4. D'Alembert-type Solution.

Let us denote the Laplace transform of $\chi(x,t)$ by

$$\bar{\chi}(x,s) = \int_0^\infty e^{-st}\,\chi(x,t)\,dt.$$

The result of applying this transform to (15) and (16) is easily seen to be

$$\frac{\partial}{\partial x}(1-x^2)\frac{\partial\bar{\chi}}{\partial x} - \frac{s^2}{c^2}\bar{\chi} = -\frac{1}{c^2}F(x)$$

and we require the solution of this equation to be bounded at $x = -1$, $x = +1$ when this is the case for $F(x)$. Let us set

$$-\frac{s^2}{c^2} = v(v+1)$$

so that we have

$$v = -\frac{1}{2} \pm i\lambda$$

where

$$\lambda = \frac{\sqrt{4s^2-c^2}}{2c}.$$

As we will see it is sufficient to take

$$v = -\frac{1}{2} + i\lambda.$$

We now have

$$\frac{\partial}{\partial x}(1-x^2)\frac{\partial\bar{\chi}}{\partial x} + v(v+1)\bar{\chi} = -\frac{1}{c^2}F(x). \tag{20}$$

The homogeneous equation

$$\frac{d}{dx}(1-x^2)\frac{dy}{dx} + v(v+1)y = 0$$

is satisfied by the linearly independent solutions

$$P_v(x) = P_{-\frac{1}{2}+i\lambda}(x) = \frac{\sqrt{2}}{\pi}\cosh\lambda\pi\int_0^\infty \frac{\cos\lambda z dz}{\sqrt{\cosh z + x}}$$

$$P_v(-x) = \frac{\sqrt{2}}{\pi}\cosh\lambda\pi\int_0^\infty \frac{\cos\lambda z dz}{\sqrt{\cosh z - x}}$$

These special Legendre functions are sometimes referred to as conical functions. The function $P_v(x)$ is analytic in $-1 < x < 1$ but it has a logarithmic singularity at $x = -1$; $P_v(-x)$ has a logarithmic singularity at $x = 1$.

In terms of $P_v(x)$ and $P_v(-x)$ it can be shown that if $F(x)$ is piecewise continuous in $-1 \leq x \leq 1$ then

$$\bar{\chi}(x,s) = \frac{\pi}{2c^2\cosh\lambda\pi}\left[P_v(x)\int_{-1}^{x} P_v(-\zeta)F(\xi)d\xi + P_v(-x)\int_x^1 P_v(\zeta)F(\zeta)d\zeta\right]$$

is the only bounded solution of (20). In terms of θ the solution is

$$(21)\quad \bar{\chi}(\theta,s) = \frac{\pi}{2c^2\cosh\lambda\pi}\left[\begin{array}{l} P_v(\cos\theta)\int_\theta^\pi P_v(-\cos\alpha)f(\alpha)\sin\alpha\, d\alpha \\ \\ +P_v(-\cos\theta)\int_0^\theta P_v(\cos\alpha)f(\alpha)\sin\alpha\, d\alpha \end{array}\right].$$

The problem now is to find the inverse of (21) in a form suitable for our purposes. A representation analogous with the D'Alembert representation for waves traveling along a string can be found by performing the inversion after $1/\cosh\lambda\pi$ has been expanded in powers of $e^{-\lambda\pi}$. We proceed to illustrate this by investigating a particular case.

Let us consider in some detail the case for which

$$f(\theta) = \begin{cases} k \text{ (cons't.)} & 0 \leq \theta \leq \theta_0 \\ 0 & \theta_0 < \theta \leq \pi. \end{cases}$$

For this initial distribution of $\psi_t(\theta,0)$ we have

$$\int_0^{\theta} P_v(\cos\alpha) f(\alpha) \sin\alpha \, d\alpha = k \int_0^{\theta} \eta(\theta_0-\alpha) \sin\alpha \, P_v(\cos\alpha) d\alpha$$

where $\eta(\zeta)$ is the unit function defined by

$$\eta(\zeta) = \begin{cases} 1 & 0 < \zeta \\ 0 & \zeta < 0 . \end{cases}$$

If we use the representation

$$P_v(\cos\alpha) = \frac{\sqrt{2}}{\pi} \int_0^{\alpha} \frac{\cos h\, \lambda u du}{\sqrt{\cos u - \cos\alpha}}$$

valid for $0 < \alpha < \pi$, we find

$$\int_0^{\theta} P_v(\cos\alpha)f(\alpha)\sin\alpha\,d\alpha = \begin{cases} \dfrac{k}{\sqrt{2}\pi}\displaystyle\int_{-\theta_o}^{\theta_o} \dfrac{e^{\lambda u}\sin u\,du}{\lambda\sqrt{\cos u-\cos\theta_o}} & \theta > \theta_o \\[2ex] \dfrac{k}{\sqrt{2}\pi}\displaystyle\int_{-\theta}^{\theta} \dfrac{e^{\lambda u}\sin u\,du}{\lambda\sqrt{\cos u-\cos\theta}} & 0 \pi \theta \leq \theta_o \end{cases}.$$

Also

$$\int_{\theta}^{\pi} P_v(-\cos\alpha)f(\alpha)\sin\alpha\,d\alpha = k\int_{\theta}^{\pi} n(\theta_o-\alpha)\sin\alpha\; P_v(-\cos\alpha)d\alpha$$

and by using

$$P_v(-\cos\alpha) = \frac{\sqrt{2}}{\pi}\int_{\alpha}^{\pi} \frac{\cos h\,\lambda(u-\pi)du}{\sqrt{\cos\alpha - \cos u}}$$

we find

$$\int_{\theta}^{\pi} P_v(-\cos\alpha)f(\alpha)\sin\alpha\,d\alpha = \begin{cases} 0 & \theta > \theta_o \\[2ex] \left[\dfrac{k}{\sqrt{2}\pi}\displaystyle\int_{-(\pi-\theta_o)}^{\pi-\theta_o} \dfrac{e^{\lambda u}\sin u\,du}{\lambda\sqrt{\cos\theta+\cos u}} - \dfrac{k}{\sqrt{2}\pi}\displaystyle\int_{-(\pi-\theta_o)}^{\pi-\theta_o} \dfrac{e^{\lambda u}\sin u\,du}{\lambda\sqrt{\cos\theta_o+\cos u}}\right] & \theta \leq \theta_o \end{cases}.$$

Hence for $0 \leq \theta \leq \theta_o$:-

$$\overline{\psi}(\theta,s) = \frac{k}{2\sqrt{2}c^2\cosh\lambda\pi}\left\{\begin{array}{l} P_v(\cos\theta)\displaystyle\int_{-(\pi-\theta)}^{\pi-\theta}\frac{e^{\lambda u}\sin u\,du}{\lambda\sqrt{\cos\theta+\cos u}} \\[2ex] -P_v(\cos\theta)\displaystyle\int_{-(\pi-\theta_o)}^{\pi-\theta_o}\frac{e^{\lambda u}\sin u\,du}{\lambda\sqrt{\cos\theta_o+\cos u}} \\[2ex] +P_v(-\cos\theta)\displaystyle\int_{-\theta}^{\theta}\frac{e^{\lambda u}\sin u\,du}{\lambda\sqrt{\cos u-\cos\theta}} \end{array}\right\}$$

and for $\theta > \theta_o$:-

$$\overline{\psi}(\theta,s) = \frac{k}{2\sqrt{2}c^2\cosh\lambda\pi}\cdot P_v(-\cos\theta)\int_{-\theta_o}^{\theta_o}\frac{e^{\lambda u}\sin u\,du}{\lambda\sqrt{\cos u-\cos\theta}}\,.$$

For simplicity let us confine our attention to the nature of the disturbance at the north pole $\theta = 0$, which is the center of the initial disturbance, and at the antipodal point $\theta = \pi$.

Since $P_v(1) = 1$ we see that the Laplace transform of the disturbance at $\theta = \pi$ is

$$\overline{\psi}(\pi,s) = \frac{k}{2\sqrt{2}c^2\cosh\lambda\pi}\int_{-\theta_o}^{\theta_o}\frac{e^{\lambda u}\sin u\,du}{\lambda\sqrt{\cos u-\cos\theta_o}}\,.$$

If we expand $1/\cosh\lambda\pi$ in powers of $e^{-\lambda\pi}$ we have

$$(22)\qquad \overline{\psi}(\pi,s) = \frac{k}{\sqrt{2}c}\sum_{m=0}^{\infty}(-1)^n\int_{-\theta_o}^{\theta_o}\frac{e^{-[(2n+1)\pi-u]\lambda}\sin u\,du}{c\lambda\sqrt{\cos u-\cos\theta_o}}\,.$$

Now

$$\frac{e^{-[(2n+1)\pi-u]\lambda}}{c\lambda} = \frac{c^{-\frac{(2n\pi+\pi-u)}{c}\sqrt{s^2-\frac{c^2}{4}}}}{\sqrt{s^2-\frac{c^2}{4}}}$$

$$= \int_0^\infty e^{-st}\eta[t-\frac{(2n\pi+\pi-u)}{c}]I_0\left[\frac{c}{2}\sqrt{t^2-\frac{(2n+\pi-u)^2}{c}}\right]dt$$

where the Bessel function

$$I_\mu(z) = \sum_{m=0}^{\infty}\frac{(\frac{z}{2})^{\mu+2m}}{m!\,\Gamma(\mu+m+1)}$$

satisfies

$$z^2\frac{d^2y}{dz} + z\frac{dy}{dz} - (z^2+\mu^2)y = 0 .$$

Therefore the inversion of (22) gives

$$(23)\qquad \psi(\pi,t) = \frac{k}{\sqrt{2c}}\sum_0^\infty(-1)^n\int_{-\theta_0}^{\theta_0}\frac{\sin u}{\sqrt{\cos u-\cos\theta_0}}\cdot\eta[t-\frac{(2n\pi+\pi-u)}{c}]$$

$$\cdot\, I_0\left[\frac{c}{2}\sqrt{t^2-(\frac{2n\pi+\pi-u}{c})^2}\right]du .$$

For any finite t the series in (23) contains only a finite number of terms; and consequently it displays some aspects of the nature of the disturbance at $\theta = \pi$ more clearly than the

infinite series representations (19). For example if $0 \leq t < \frac{\pi-\theta_0}{c}$ we can see from (23) that

$$\psi(\pi,t) = 0 \qquad 0 \leq t < \frac{\pi-\theta_0}{c}$$

so there is no disturbance at the south pole during this time interval. The front of the disturbance from the circle of co-latitude $\theta = \theta_0$ does not arrive at $\theta = \pi$ until $t = \frac{\pi-\theta_0}{c}$. During the time interval $\frac{\pi-\theta_0}{c} \leq t \leq 3\frac{\pi-\theta_0}{c}$ the disturbance arrives at $\theta = \pi$ from the initially disturbed area and is then reflected back. In this time interval the disturbance is determined by

$$\psi(\pi,t) = \frac{k}{\sqrt{2c}} \int_{-\theta_0}^{\theta_0} \frac{\sin u}{\sqrt{\cos u - \cos \theta_0}} \eta[t-(\frac{\pi-u}{c})] I_0[\frac{c}{2}\sqrt{t^2-(\frac{\pi-u}{c})^2}]du$$

or

$$\psi(\pi,t) = \frac{k}{\sqrt{2c}} \int_{M}^{\theta_0} \frac{\sin u}{\sqrt{\cos u - \cos \theta_0}} I_0[\frac{c}{2}\sqrt{t^2-(\frac{\pi-u}{c})^2}]du \qquad \frac{\pi-\theta_0}{c} \leq t \leq 3\frac{\pi-\theta_0}{c}$$

where M is the maximum of $\frac{\pi}{c} - t; -\theta_0$. By using the last integral it can be shown that if $\frac{\pi-\theta_0}{t} \leq t \leq \frac{\pi}{c}$ the disturbance is positive and increasing ($k > 0$); but to see the precise variation in $\frac{\pi-\theta_0}{t} \leq t \leq \frac{\pi}{c}$ and the remainder of the interval $\frac{\pi-\theta}{c} \leq t \leq 3\frac{\pi-\theta_0}{c}$ we would have to evaluate the integral numerically.

The Laplace transform of the disturbance at $\theta = 0$ is

$$\bar{\psi}(0,s) = \frac{k}{2\sqrt{2}\, c^2 \cosh \lambda\pi} \left\{ \int_{-\pi}^{\pi} \frac{e^{\lambda u} \sin u \, du}{\lambda\sqrt{1+\cos u}} - \int_{-(\pi-\theta_o)}^{\pi-\theta_o} \frac{e^{\lambda u} \sin u \, du}{\lambda\sqrt{\cos \theta_o + \cos u}} \right\}$$

or

$$(24) \quad \bar{\psi}(0,s) = \frac{4k}{c^2(1+4\lambda)^2} - \frac{k}{2\sqrt{2}c^2 \cosh \lambda\pi} \int_{\theta_o}^{2\pi-\theta_o} \frac{e^{\lambda(\pi-u)} \sin u \, du}{\lambda\sqrt{\cos \theta_0 - \cos u}} .$$

If we expand $1/\cosh \lambda\pi$ in powers of $e^{-\lambda\pi}$ (24) becomes

$$\bar{\psi}(0,s) = \frac{k}{s^2} - \frac{k}{\sqrt{2}c} \sum_{n=0}^{\infty} (-1)^n \int_{\theta_o}^{2\pi-\theta_o} \frac{e^{-(2n\pi+u)\lambda} \sin u \, du}{c\lambda\sqrt{\cos \theta_0 - \cos u}} .$$

The inverse of this is

$$(25) \quad \psi(0,t) = kt - \frac{k}{\sqrt{2}c} \sum_{n=0}^{\infty} (-1)^n \int_{\theta_o}^{2\pi-\theta_o} \frac{\sin u}{\sqrt{\cos \theta_o - \cos u}} \eta\left[t - \left(\frac{2n\pi+u}{c}\right)\right] \cdot$$

$$\cdot I_o\left[\frac{c}{2}\sqrt{t^2 - \left(\frac{2n\pi+u}{c}\right)^2}\right]$$

For $0 \leq t \leq \frac{\theta_o}{c}$; (25) reduces to

$$\psi(0,t) = kt \qquad 0 \leq t \leq \frac{\theta_o}{c}$$

which shows that the disturbance grows linearly with the time during the interval $0 \leq t \leq \frac{\theta_0}{c}$. In this interval the disturbance is sustained by the arrival of disturbances coming from the circles of latitude in the range $0 \leq \theta \leq \theta_0$. In order to discuss the change in the disturbance during subsequent finite intervals of time we need to evaluate a finite number of integrals given by (25). During the interval $\frac{\theta_0}{c} \leq t \leq \frac{2\pi+\theta_0}{c}$, for example, the disturbance is determined by

$$\psi(0,t) = kt - \frac{k}{\sqrt{2c}} \int_{\theta_0}^{2\pi-\theta_0} \frac{\sin u}{\sqrt{\cos\theta_0 - \cos u}} \eta[t-\frac{u}{c}] I_0[\frac{c}{2}\sqrt{t^2 - \frac{u^2}{c^2}}]du$$

$$\frac{\theta_0}{c} \leq t \leq \frac{2\pi+\theta_0}{c} .$$

It is of some interest to consider the disturbance caused by an initial concentration of velocity at $\theta = 0$. If we take

$$(26) \qquad f(\theta) = \begin{cases} \frac{k_0}{\varepsilon^2} & 0 \leq \theta \leq \varepsilon \\ 0 & \varepsilon < \theta \leq \pi \end{cases}$$

we see from (21) that the Laplace transform of the disturbance for $\theta > \varepsilon$ is

$$\overline{\psi}(\theta,s) = \frac{\pi}{2c^2\cosh \lambda\pi} \cdot P_\nu(-\cos\theta) \int_0^\varepsilon P_\nu(\cos\alpha) \frac{k_0}{\varepsilon^2} \sin\alpha d\alpha.$$

The limit of this as $\varepsilon \to 0$ is

$$(27) \qquad \bar{\Psi}(\theta,s) = \frac{\pi k_0}{4c^2 \cosh \lambda\pi} \cdot P_v(-\cos\theta).$$

It should be observed that if (26) is substituted in the energy equation of section 2; and ε allowed to approach zero we find that the energy associated with the delta distribution of initial velocity is infinite.

Since

$$P_v(-\cos\theta) = \frac{\sqrt{2}}{\pi} \int_0^{\pi-\theta} \frac{\cosh \lambda z}{\sqrt{\cos\theta + \cos z}}\, dz \qquad 0 < \theta < \pi$$

the transform (27) can be written as

$$(28) \qquad \bar{\Psi}(\theta,s) = \frac{k_0\sqrt{2}}{4c^2 \cosh \lambda\pi} \int_0^{\pi-\theta} \frac{\cosh \lambda z}{\sqrt{\cos\theta + \cos z}}\, dz$$

where $\lambda = \frac{1}{c}\sqrt{s^2 - \frac{c^2}{4}}$. If we express $\cos \lambda z/\cosh \lambda\pi$ as an infinite sum of partial fractions and then invert, we find the Bernoulli-type solution which agrees with (19) evaluated for the special delta distribution defined by (26) as $\varepsilon \to 0$. The D'Alembert type of representation can be found by expanding $1/\cosh \lambda\pi$ into a sum of exponentials prior to performing the inversion.

The equation (28) is equivalent to

$$\int_{\theta}^{\pi} (\sin \alpha)\overline{\psi}(\alpha,s)d\alpha = \frac{k_0\sqrt{2}}{2c^2\cosh \lambda\pi} \int_0^{\pi-\theta} \sqrt{\cos \theta + \cos z} \cosh \lambda z \, dz$$

$$(29) \qquad = \frac{k_0\sqrt{2}\, e^{-\lambda\pi}}{2c^2(1+e^{-2\lambda\pi})} \int_{-(\pi-\theta)}^{\pi-\theta} e^{\lambda z} \sqrt{\cos \theta + \cos z} \, dz$$

$$= \frac{k_0\sqrt{2}}{2c^2} \sum_{n=0}^{\infty} (-1)^n \int_{-(\pi-\theta)}^{\pi-\theta} e^{-[(2n+1)\pi-z]\lambda} \sqrt{\cos \theta + \cos z} \, dz$$

Since

$$e^{-a\sqrt{s^2-b^2}} = \int_0^{\infty} e^{-st}\left[\delta(t-a) + \eta(t-a)\cdot ab \frac{I_1(b\sqrt{t^2-a^2})}{\sqrt{t^2-a^2}}\right]dt$$

where $\delta(z)$ is the Dirac delta function, the inversion of (29) gives

$$\int_{\theta}^{\pi} (\sin \alpha)\psi(\alpha,t)d\alpha = \frac{k_0\sqrt{2}}{2c^2} \sum_{n=0}^{\infty} (-1)^n \int_{-(\pi-\theta)}^{\pi-\theta} \left[\delta\left\{t - \left[\frac{(2n+1)\pi-z}{c}\right]\right\}\right.$$

$$+ \eta\left\{t - \left[\frac{(2n+1)\pi-z}{c}\right]\right\} \cdot \left[\frac{(2n+1)\pi-z}{2}\right]$$

$$\left. \cdot \frac{I_1\left(\frac{c}{2}\sqrt{t^2 - \left[\frac{(2n+1)\pi-z}{c}\right]^2}\right)}{\sqrt{t^2 - \left[\frac{(2n+1)\pi-z}{c}\right]^2}}\right] \cdot \sqrt{\cos \theta + \cos z} \, dz$$

or

$$(30)\quad \int_{\theta}^{\pi} (\sin \alpha)\psi(\alpha,t)d\alpha = \frac{k_0\sqrt{2}}{2c} \sum_{n=0}^{\infty}(-1)^n \int_{\frac{ct-2(n+1)\pi+\theta}{c}}^{\frac{ct-2n\pi-\theta}{c}} \left\{ \delta(\zeta) + \eta(\zeta)\frac{c}{2}(t-\zeta) \frac{I_1[\frac{c}{2}\sqrt{\zeta(2t-\zeta)}]}{\sqrt{\zeta(2t-\zeta)}} \right\} \cdot \sqrt{\cos\theta - \cos c(t-\zeta)}\, d\zeta .$$

For finite t the series on the right hand side of (30) contains only a finite number of terms. If $t < \frac{\theta}{c}$ no terms appear on the right, which corresponds to the fact that the disturbance does not manifest itself at θ until $t = \frac{\theta}{c}$. Let us now consider in some detail the time interval $0 < \theta < ct < 4\pi + \theta$, which covers the time required for at least two transits of the disturbance at any θ. For this interval only two terms appear on the right of (30) namely

$$\int_{\theta}^{\pi} (\sin \alpha)\psi(\alpha,t) = \frac{k_0\sqrt{2}}{2c} \int_{\frac{ct-2\pi)\theta}{c}}^{\frac{ct-\theta}{c}} - \frac{k_0\sqrt{2}}{2c} \int_{\frac{ct-4\pi+\theta}{c}}^{ct-2\pi-\theta}$$

$$(31)\quad \left\{ \delta(\zeta)+\eta(\zeta)\frac{c}{2}(t-\zeta) \frac{I_1[\frac{c}{2}\sqrt{\zeta(2t-\zeta)}]}{\sqrt{\zeta(2t-\zeta)}} \right\} \sqrt{\cos\theta - \cos c(t-\zeta)}\, d\zeta .$$

For $0 < \theta < ct < 2\pi - \theta$, which is the time interval during which the disturbance passess from θ to the south pole and back to θ, (31) yields

$$\int_{\theta}^{\pi} (\sin \alpha)\psi(\alpha,t)d\alpha = \frac{k_0\sqrt{2}}{2c}\sqrt{\cos\theta - \cos ct}$$

$$+ \frac{k_0\sqrt{2}}{4}\int_0^{\frac{ct-\theta}{c}} (t-\zeta)\frac{I_1[\frac{c}{2}\sqrt{\zeta(2t-\zeta)}]}{\sqrt{\zeta(2t-\zeta)}}\sqrt{\cos\theta - \cos c(t-\zeta)}\, d\zeta$$

from which

$$(32) \qquad \psi(\theta,t) = \frac{k_0\sqrt{2}}{4c\sqrt{\cos\theta - \cos ct}}$$

$$+ \frac{k_0\sqrt{2}}{8}\int_{\theta/c}^{t} \frac{\zeta}{\sqrt{\cos\theta - \cos c\zeta}}\,\frac{I_1(\frac{c}{2}\sqrt{t^2-\zeta^2})}{\sqrt{t^2-\zeta^2}}\, d\zeta$$

Since $\psi(\theta,t) = 0$ for $ct < 0$, (32) shows that as t passes through the value $t = \theta/c$ the disturbance at θ suffers an infinite jump discontinuity. If ct is slightly larger than θ, $\psi(\theta,t)$ behaves essentially like const./$\sqrt{ct-\theta}$. For $0 < \theta < ct < 2\pi - \theta$, (32) gives the wake of the disturbance left behind at θ while the front travels to the south pole and is there reflected back.

After the second passage of the front through θ while the front passes to the initial center of the disturbance and then back to the position θ, that is for $2\pi - \theta < ct < 2\pi + \theta$, the disturbance at θ is given by

$$\int_{\theta}^{\pi} \sin\alpha\ \psi(\alpha,t)d\alpha$$

$$= \frac{k_0\sqrt{2}}{4} \int_{\frac{ct-2\pi+\theta}{c}}^{\frac{ct-\theta}{c}} \frac{(t-\zeta)}{\sqrt{\zeta(2t-\zeta)}} \cdot I_1[\tfrac{c}{2}\sqrt{\zeta(2t-\zeta)}]\sqrt{\cos\theta-\cos c(t-\zeta)}d\zeta$$

or

$$\psi(\theta,t) = \frac{k_0\sqrt{2}}{8} \int_{\theta/c}^{\frac{2\pi-\theta}{c}} \frac{\zeta I_1(\frac{c}{2}\sqrt{t^2-\zeta^2})}{\sqrt{\cos\theta-\cos c\zeta}\sqrt{t^2-\zeta^2}}d\zeta\ . \tag{33}$$

A comparison of this with (32) shows that the disturbance exhibits the same kind of singular behavior at $ct = 2\pi-\theta$ as it does at $ct = \theta$.

After the third passage of the wave over the position θ while it passes on to the antipodal point to be again reflected back, that is for $2\pi + \theta < ct < 4\pi - \theta$ the "tail" or wake of the disturbance at θ is given by

$$\int_{\theta}^{\pi} \sin\alpha\ \psi(\alpha,t)d\alpha$$

$$= \frac{k_0\sqrt{2}}{4} \int_{\frac{ct-2\pi+\theta}{c}}^{\frac{ct-\theta}{c}} \frac{(t-\zeta)}{\sqrt{\zeta(2t-\zeta)}} I_1[\tfrac{c}{2}\sqrt{\zeta(2t-\zeta)}]\sqrt{\cos\theta-\cos c(t-\zeta)}\ d\zeta$$

$$- \frac{k_0\sqrt{2}}{2c}\sqrt{\cos\theta-\cos ct}$$

$$- \frac{k_0\sqrt{2}}{2c} \int_{0}^{\frac{ct-2\pi-\theta}{c}} \frac{(t-\zeta)}{\sqrt{\zeta(2t-\zeta)}} I_1[\tfrac{c}{2}\sqrt{\zeta(2t-\zeta)}]\sqrt{\cos\theta-\cos c(t-\zeta)}d\zeta$$

or

$$(34)\quad \psi(\theta,t) = -\frac{k_0\sqrt{2}}{4c\sqrt{\cos\theta-\cos ct}}$$

$$+\frac{k_0\sqrt{2}}{8}\int_{\theta/c}^{\frac{2\pi-\theta}{c}} \frac{\zeta I_1\left(\frac{c}{2}\sqrt{t^2-\zeta^2}\right)}{\sqrt{\cos\theta-\cos c\zeta}\,\sqrt{t^2-\zeta^2}}\,d\zeta$$

$$-\frac{k_0\sqrt{2}}{8}\int_{\frac{2\pi+\theta}{c}}^{t} \frac{\zeta I_1\left(\frac{c}{2}\sqrt{t^2-\zeta^2}\,d\zeta\right)}{\sqrt{\cos\theta-\cos c\zeta}\,\sqrt{t^2-\zeta^2}}\quad .$$

This shows that the intensity of the singular part of the disturbance at $ct = 2\pi+\theta$ is the same as it was at $ct = 2\pi-\theta$ and $ct = \theta$ although there is a reversal of sign. The general expression (30) shows that the singular part of the front of the disturbance changes only in sign and these changes occur at passages 3,5,7 ... . The maintenance of the strength of the singularity is not remarkable because under the assumend initial conditions the disturbance is charged with infinite energy.

We see now that we can proceed to find, and evaluate numerically if need be, the various integrals which give the disturbance at any position $0 < \theta < \pi$ for any interval of time.

The disturbance at the north pole during the interval $0 < ct < 4\pi$ can be found by allowing θ to approach zero in the integrals (32), (33) and (34). The wake left at $\theta = 0$ as the

disturbance emanates from the north pole, proceeds to the south pole and comes back ($0 < ct < 2\pi$) is, as we can see from (32),

$$(35)\quad \psi(0,t) = \frac{k_0}{4c \sin\frac{ct}{2}} + \frac{k_0}{8}\int_0^t \frac{\zeta}{\sin\frac{c\zeta}{2}} \cdot \frac{I_1(\frac{c}{2}\sqrt{t^2-\zeta^2}}{\sqrt{t^2-\zeta^2}}\, d\zeta.$$

Notice here that if ct approaches 2π from below $\psi(0,t)$ behaves like

$$\psi(0,t) \sim \frac{a}{2\pi-ct} + b \ln(2\pi-ct).$$

Equation (34) can be written

$$(36)\quad \psi(\theta,t) = -\frac{k_0\sqrt{2}}{4c\sqrt{\cos\theta - \cos ct}}$$

$$+ \frac{k_0}{8}\int_{\theta/c}^{\frac{2\pi-\theta}{c}} \frac{\zeta I_1(\frac{c}{2}\sqrt{t^2-\zeta^2})}{\sin\frac{c\zeta}{2}\sqrt{1-\sin^2\frac{\theta}{2}\csc^2\frac{c\zeta}{2}}\sqrt{t^2-\zeta^2}}\, d\zeta$$

$$+ \frac{k_0}{8}\int_{\frac{2\pi+\theta}{c}}^{t} \frac{\zeta I_1(\frac{c}{2}\sqrt{t^2-\zeta^2})}{\sin\frac{c\zeta}{2}\sqrt{1-\sin^2\frac{\theta}{2}\csc^2\frac{c\zeta}{2}}\sqrt{t^2-\zeta^2}}\, d\zeta.$$

The change in sign of the second integral is due to the fact that $\sqrt{\cos\theta-\cos c\zeta}$ is positive and hence

$\sqrt{\cos\theta-\cos c\zeta} = -\sqrt{2}\sin\frac{c\zeta}{2}\sqrt{1-\sin^2\frac{\theta}{2}\csc^2\frac{c\zeta}{2}}$ when $2\pi < c\zeta < 4\pi$.

The limit of (36) as $\theta \to 0$, which gives the disturbance at $\theta = 0$ for the interval $2\pi < ct < 4\pi$, is

$$(37)\quad \psi(0,t) = +\frac{k_0}{4c\,\sin\frac{ct}{2}} + \frac{k_0}{8}\int_0^t \frac{\zeta I_1\left(\frac{c}{2}\sqrt{t^2-\zeta^2}\right)}{\left(\sin\frac{c\zeta}{2}\right)\sqrt{t^2-\zeta^2}}\,d\zeta$$

where the principal value of the integral is to be taken. If ct approaches 2π from above, we see from (37) that $\psi(0,t)$ behaves like

$$\psi(0,t) \sim -\frac{a}{2\pi-ct} + b\,\ln(ct-2\pi).$$

The last results show that as the front of the disturbance arrives at the initial center of disturbance at $\theta = 0$ it exhibits a more violent behavior than it does when it is away from the north pole at the position θ where $0 < \theta < \pi$.

The disturbance at the south pole for the interval $0 < ct < 4\pi$ can be found by taking the limits of (32), (33) and (34) as θ approaches π. Equivalent results, however, can be found with less trouble by substituting $\theta = \pi$ directly in (27). If we do this we find [since $P_v(1) = 1$] that

$$(38)\quad \begin{aligned} \overline{\psi}(\pi,s) &= \frac{\pi k_0}{4c^2\cosh\lambda\pi} \\ &= \frac{k_0\pi}{2c^2}\sum_0^\infty (-1)^n e^{-(2n+1)\pi\lambda} \end{aligned}$$

(We cannot find $\psi(0,t)$ by directly substituting $\theta = 0$ in (27) because $P_v(-\cos\theta)$ has a logarithmic singularity at $\theta = 0$. The inversion of (38) gives

$$(39) \qquad \psi(\pi,t) = \frac{\pi k_0}{2c^2} \sum_{n=0}^{\infty} (-1)^n \left\{ \begin{array}{l} \delta[t - (2n+1)\frac{\pi}{c}] \\ + \eta\,[t - (2n+1)\frac{\pi}{c}]\cdot(2n+1)\frac{\pi}{2} \\ \cdot \dfrac{I_1\left[\frac{c}{2}\sqrt{t^2 - (2n+1)^2\frac{\pi^2}{c^2}}\right]}{\sqrt{t^2 - (2n+1)^2\frac{\pi^2}{c^2}}} \end{array} \right\} .$$

This shows that if $0 \leq ct < \pi$ then $\psi(\pi,t) = 0$. If $\pi \leq ct < 3\pi$ we have

$$\psi(\pi,t) = \frac{\pi k_0}{2c^2}\,\delta(t - \frac{\pi}{c}) + \frac{\pi}{2}\,\eta(t - \frac{\pi}{c})\,\frac{I_1\left(\frac{c}{2}\sqrt{t^2 - \frac{\pi^2}{c^2}}\right)}{\sqrt{t^2 - \frac{\pi^2}{c^2}}} .$$

The delta function singularity which the front exhibits as it arrives at the south pole at $ct = \pi$ is stronger than what it has as it arrives at θ $(0 < \theta < \pi)$ but less strong than the singularity exhibited when the front comes to the north pole. As the disturbance recedes from the south pole

$$\psi(\pi,t) = \frac{k_0\pi^2}{4c^2} \cdot \frac{I_1\left[\frac{c}{2}\sqrt{t^2 - \frac{\pi^2}{c^2}}\right]}{\sqrt{t^2 - \frac{\pi^2}{c^2}}} .$$

This is the wake left at $\theta = \pi$ during the interval $\pi < ct < 3\pi$ while the front of the disturbance moves from south pole to north pole to south pole again. For the interval $3\pi \leq ct < 5\pi$ we have

$$\psi(\pi,t) = \frac{\pi k_0}{2c^2} \left\{ \begin{array}{l} -\delta(t - \frac{3\pi}{c}) \\ + \frac{\pi}{2} \dfrac{I_1\left(\frac{c}{2}\sqrt{t^2 - \frac{\pi^2}{c^2}}\right)}{\sqrt{t^2 - \frac{\pi^2}{c^2}}} \\ - \frac{3\pi}{2} \dfrac{I_1\left[\frac{c}{2}\sqrt{t^2 - (\frac{3\pi}{c})^2}\right]}{\sqrt{t^2 - (\frac{3\pi}{c})^2}} \end{array} \right\}$$

In this interval the disturbance, as it comes back to $\theta = \pi$, exhibits except for sign the same kind of singularity it possessed at its first arrival. The wake left during the interval $3\pi < ct < 5\pi$ is

$$\psi(\pi,t) = \frac{k_0\pi^2}{4c^2} \left\{ \begin{array}{l} \dfrac{I_1\left[\frac{c}{2}\sqrt{t^2 - (\frac{\pi}{c})^2}\right]}{\sqrt{t^2 - (\frac{\pi}{c})^2}} \\ \dfrac{-3I_1\left[\frac{c}{2}\sqrt{t^2 - (\frac{3\pi}{c})^2}\right]}{\sqrt{t^2 - (\frac{3\pi}{c})^2}} \end{array} \right\}$$

Date Due

NOV 30 '65			
JAN 24 '66			
OCT 11 1971			
FEB 25 1972			
JUN 5 1973			
FEB 13 1974			
JUL 3 0 1978			
	PRINTED	IN U. S. A.	

c.1

NYU
IMM-271
Peters

Waves on a sphere

NYU c.1
IMM-271 Peters

AUTHOR
Waves on a sphere

TITLE

DATE DUE	BORROWER'S NAME	ROOM NUMBER
[illegible]	[illegible]	
JAN 24 '65	RENEWED	
OCT [illegible] 1971	[illegible]	
FEB 2 5 [illegible]		

N. Y. U. Institute of
Mathematical Sciences
25 Waverly Place
New York 3, N. Y.

NEW YORK UNIVERSITY
INSTITUTE OF MATHEMATICAL SCIENCES
LIBRARY
25 Waverly Place, New York 3, N. Y.